sonata

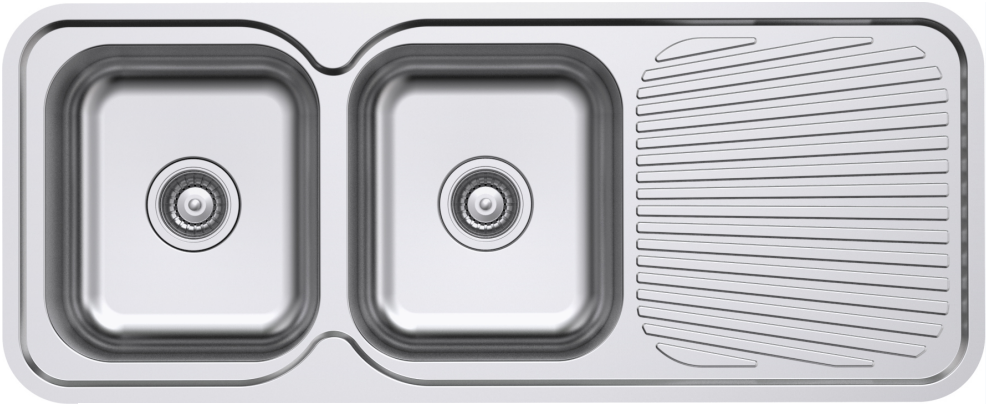

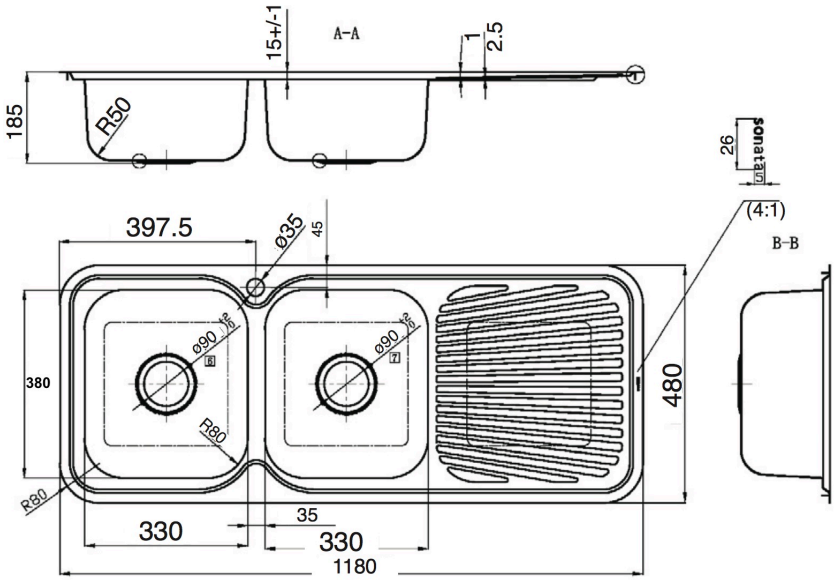

Product Code	901611
Model Name	Kore MKII Double Bowl Sink LHB
Material	Stainless Steel
Product Dimensions (mm)	1180 x 480 x 185
Thickness	0.8mm
Faucet Included	N/A
Mount Type	Top Mounted
Strainer Basket Included	2 x 90mm
Tap Holes	1