euro appliances

Code EAGL700S – 70cm Curved Glass Canopy

Air Extraction

FEATURES

- Stainless steel + glass finish
- 3 speed motor
- 700m³ / hr extraction capacity
- 2 x 20W halogen lights
- Separate light function
- Tempered curved glass design
- Electronic button front controls
- Dishwasher safe cassette filters
- 150mm air flow outlet

3 SPEED MOTOR

This range hood provides the option of 3 different speed levels ensuring you have the option to use your range hood at a low, medium or high level of operation.

HIGH EXTRACTION CAPACITY

The extraction capacity of 700m³/hr provides strength and power to this stylish range hood.

DISHWASHER SAFE CASETTE FILTERS

For easy cleaning, the cassette filters can be placed in a dishwasher and can easily be removed re-connected from the range hood.

DECIBEL RATING

54-60 dba

TIPS FOR BETTER USE

- Leave your range hood on for 15 minutes after the cooking of the food to remove all odors, steam etc.
- The dishwasher-safe cassette filters need to be cleaned after approximately 2 months of standard operation
- It is recommended the range hood be installed between 650mm and 750mm above the cook top
- It is also recommended that fumes from the range hood be ducted out into the atmosphere.
- Turn off the range hood before attempting to clean

-Installation recommended by qualified installer.

Electronic button front control

20W halogen lights

Dishwasher safe cassette filter

bringing european quality to your home

ELECTRICAL REQUIREMENT:

Range hood is supplied with 10amp cord & plug.

OPTIONAL ACCESSORIES

RECIRCULATING ACCESSORIES

Carbon Filter Code: CF110 (requires x2)

RANGEHOOD EXTENSIONS

Flue Extension 1m Code: ERGLEXT

RANGEHOOD VENTILATION KITS

RHKE65 – Wall – Eave vent kit
RHKMR65 – Universal metal roof kit, includes flashing
RHKTR65 – Universal tile roof kit, includes flashing

FILTER CLEANING INFORMATION:

Cassette mesh filter: requires cleaning monthly
This will ensure no interruptions with airflow operation.

PRODUCT DIMENSIONS

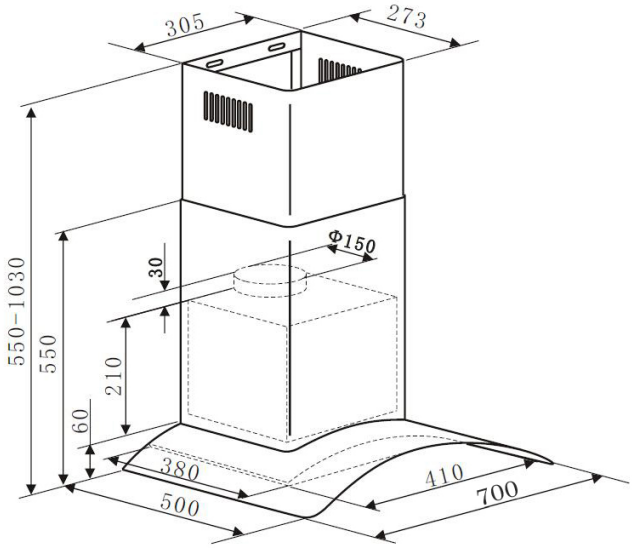

Disclaimer: Please note that measurements and model appearances may change at any time. Euro Appliances reserve the right to change specifications without notice.

3 YEARS