GRAB RAILS & BACK RESTS

METLAM AUSTRALIA

MLR50TPH

Pull Down Grab Rail with Toilet Roll Holder

Specification

Material	#304 Stainless Steel
Tubing:	1.2mm #304 Stainless Steel - 32mmØ
Mounting Bracket & Brace:	2.5mm Formed #304 Stainless Steel
Toilet Roll Holder:	12.5mmØ Stainless Steel Bar
Finish	Satin Stainless Steel
Dimensions	
Overall:	850mmL x 315mmH
Grab Rail:	215mmH from outer edge to edge
Toilet Roll Holder:	168mmL with top of Holder 50mm below underside of upper rail
Mounting Bracket:	104mmW x 315mmH x 30~50mmD x 2.5mmT
Mounting Holes:	7 off by 8mmØ
Features	Unit is Seamless Welded & Polished
Note	Unit stores in upright position
Related Video	Stainless Steel Cleaning & Maintenance
Consumable Advice	Standard Toilet Roll, can hold up to 230 sheets per roll

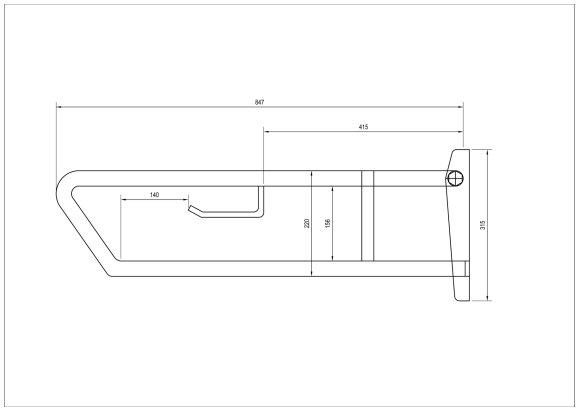

Downloads & Resources

Care & Maintenance
Installation instructions
Revit

The photographs and line drawings of the products presented above are representational only. Metlam Australia Pty Ltd reserves the right to, and from time to time, make changes and improvements in design and dimensions.